WALL MOUNT CLEAT SET UP

100MM SEG EXTRUSION

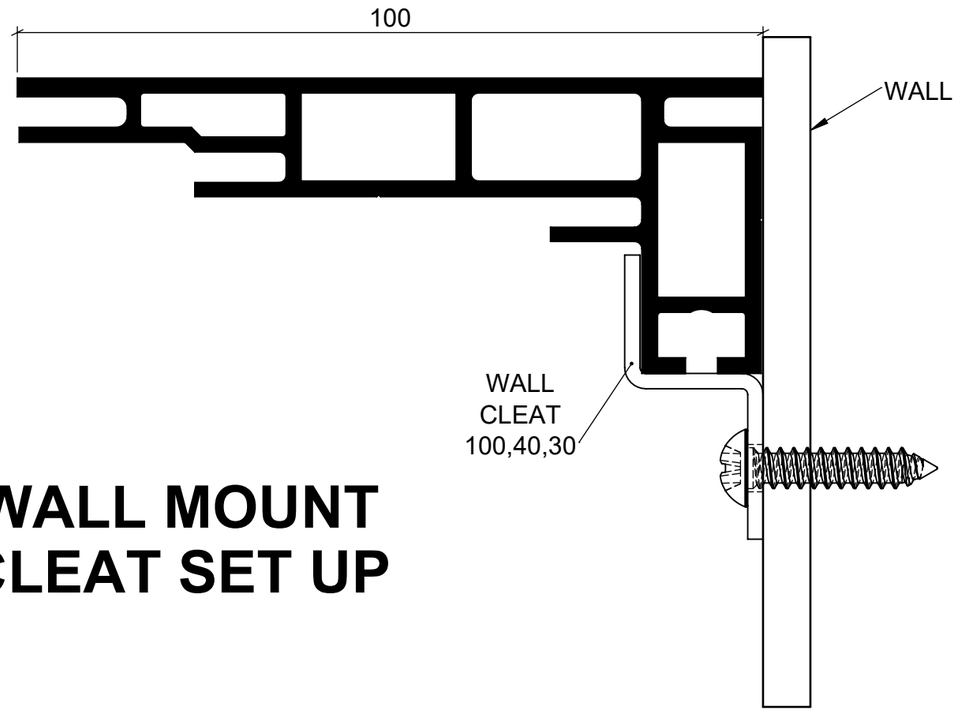

40MM SEG EXTRUSION

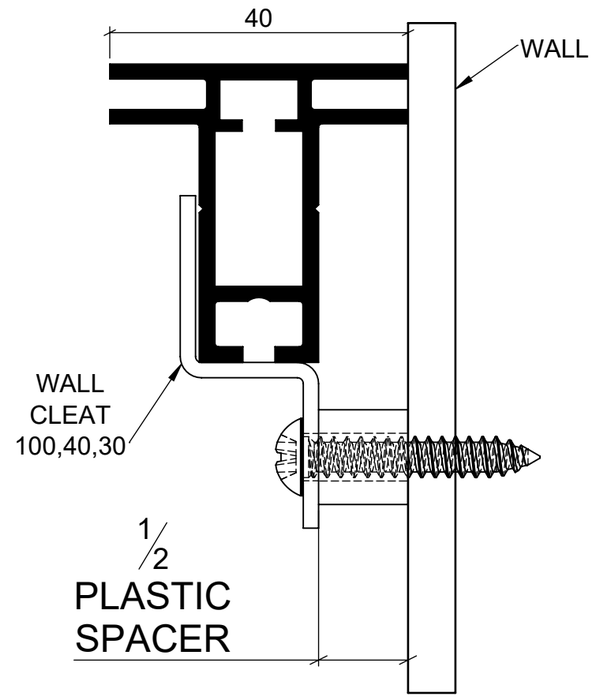

30MM SEG EXTRUSION

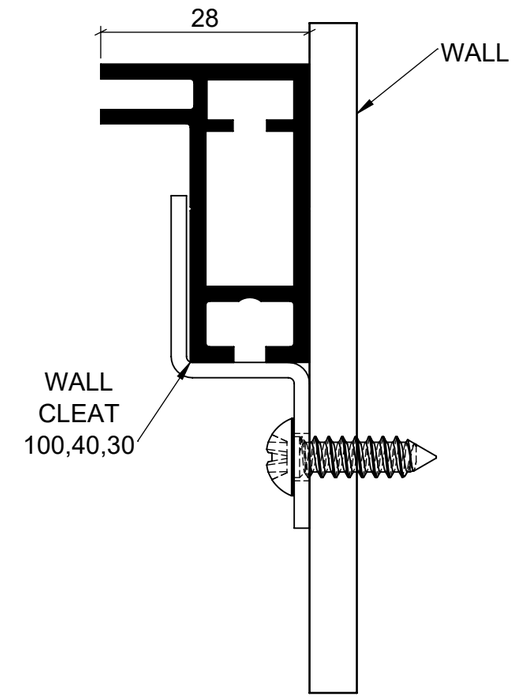

55MM SEG EXTRUSION

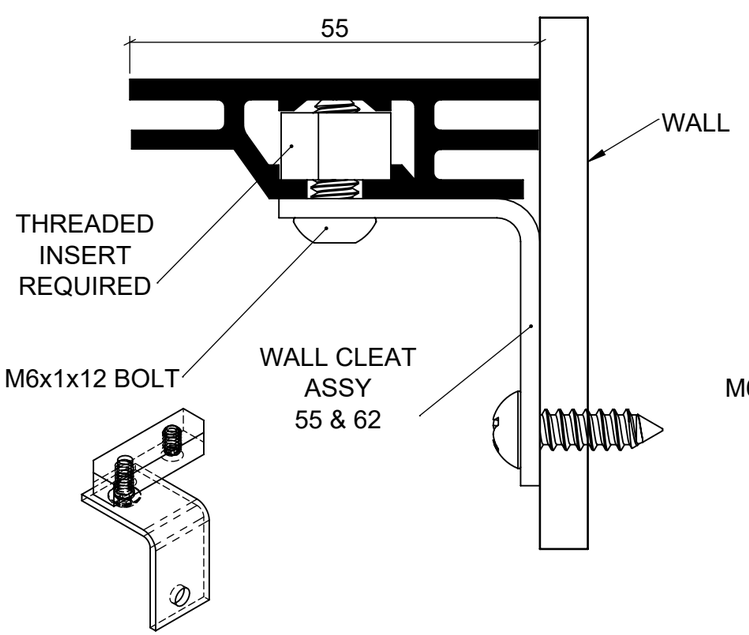

62MM SEG EXTRUSION

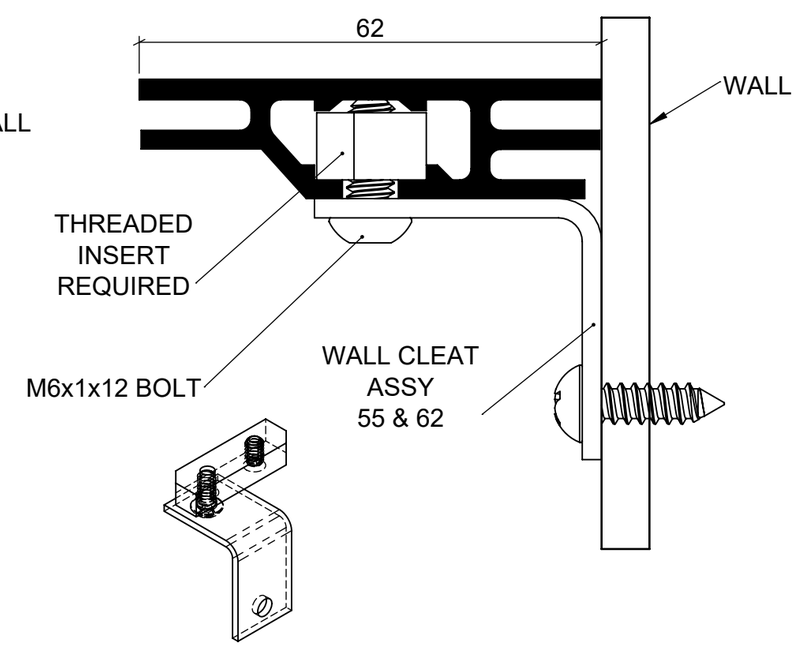
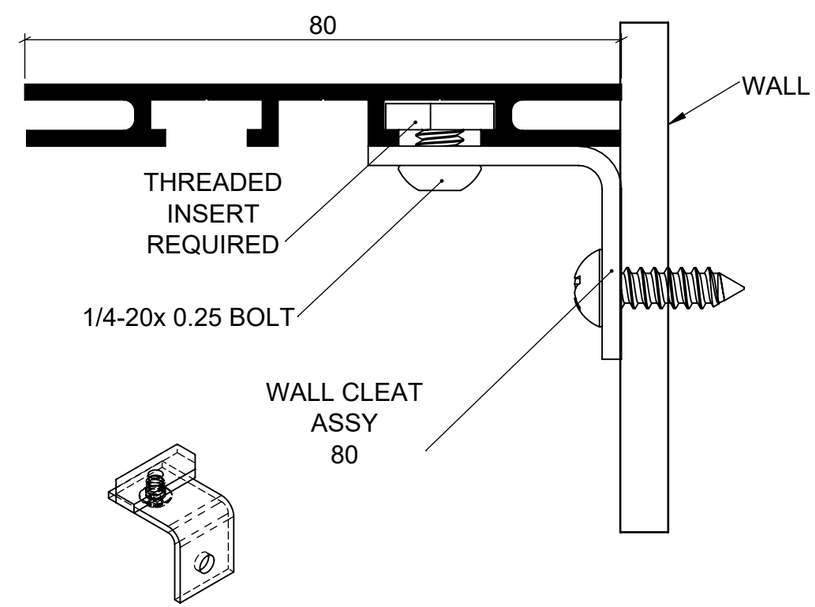
80MM BENDABLE EXTRUSION